Continental Disc® Corporation

Preparation and Installation of the Universal Burst Disc Indicator (B.D.I.®) Assembly

WARNING

USER SHOULD READ AND THOROUGHLY UNDERSTAND THESE INSTRUCTIONS BEFORE INSTALLING THE RUPTURE DISC AND UNIVERSAL BURST DISC INDICATOR (B.D.I.). THESE INSTRUCTIONS DO NOT PURPORT TO ADDRESS ALL OF THE SAFETY FACTORS ASSOCIATED WITH THE RUPTURE DISC'S USE IN SERVICE. IT IS THE RESPONSIBILITY OF THE USER TO ESTABLISH APPROPRIATE SAFETY, HEALTH, AND TRAINING MEASURES FOR THEIR PERSONNEL INSTALLING, SERVICING, OR WORKING IN AN AREA WHERE RUPTURE DISC ASSEMBLIES ARE IN USE. SERVICE AND/OR MAINTENANCE ON OR AROUND THE RUPTURE DISC DEVICE MUST NOT BE PERFORMED WHILE THE DEVICE IS SUBJECTED TO OPERATING PRESSURES AND/OR TEMPERATURES.

IT IS THE USER'S SOLE RESPONSIBILITY FOR DESIGN AND PLACEMENT OF RUPTURE DISCS WITHIN THEIR FACILITY AND UPON THE EQUIPMENT UPON WHICH THE RUPTURE DISC OF USER'S SELECTION IS TO BE LOCATED. IT IS USER'S SOLE RESPONSIBILITY FOR THE DESIGN OF ADEQUATE VENTING AND INSTALLATION OF ADEQUATE VENT PIPING OR DIRECTIONAL FLOW AFTER RUPTURE OCCURS WITH THE RUPTURE DISC AS INTENDED. WHEN SIZE IS SPECIFIED, CONTINENTAL DISC CORPORATION ASSUMES THAT ADEQUATE PROVISIONS HAVE BEEN MADE BY PURCHASER FOR PROPER VENTING OF A SYSTEM TO RELIEVE THE SPECIFIC PRESSURE. LOCATE RUPTURE DISC WHERE PEOPLE OR PROPERTY WILL NOT BE EXPOSED TO THE SYSTEM DISCHARGE IN CASE OF RUPTURE. VENT TOXIC OR FLAMMABLE FUMES OR LIQUIDS TO A SAFE LOCATION TO PREVENT PERSONAL INJURY OR PROPERTY DAMAGE.

IT IS THE USER'S SOLE RESPONSIBILITY TO SPECIFY THE BURST PRESSURE RATING OF A RUPTURE DISC AT A COINCIDENT TEMPERATURE AT WHICH THE RUPTURE DISC IS TO BE USED. A RUPTURE DISC IS A TEMPERATURE SENSITIVE DEVICE. THE BURST PRESSURE OF THE RUPTURE DISC IS DIRECTLY AFFECTED BY ITS EXPOSURE TO THE COINCIDENT TEMPERATURE. GENERALLY, AS THE TEMPERATURE AT THE RUPTURE DISC INCREASES, THE BURST PRESSURE DECREASES; INVERSELY, AS THE TEMPERATURE AT THE RUPTURE DISC DECREASES, THE BURST PRESSURE MAY INCREASE. FAILURE TO PROPERLY UTILIZE A RUPTURE DISC AT THE SPECIFIED COINCIDENT TEMPERATURE COULD CAUSE PREMATURE FAILURE OR OVERPRESSURIZATION OF A SYSTEM.

THE INSTANTANEOUS RELEASE OF PRESSURE FROM THE RUPTURE DISC CAN CREATE VIOLENT NOISES DUE TO THE DISCHARGE AT SONIC VELOCITY. IT IS THE USER'S SOLE RESPONSIBILITY TO PROTECT AGAINST HEARING DAMAGE TO ANY BYSTANDERS.

RUPTURE DISCS AND TAGS ARE MADE OF METAL FOILS OF VARYING THICKNESS. THE METAL EDGES MAY BE SHARP. PERSONNEL INSTALLING OR EXAMINING THE RUPTURE DISCS SHOULD PROTECT AGAINST CUTS OR INJURY WHEN HANDLING THE RUPTURE DISC. DO NOT LIFT A RUPTURE DISC BY ITS ATTACHED TAG.

PARTICLES MAY BE DISCHARGED WHEN THE RUPTURE DISC RUPTURES. THESE PARTICLES MAY BE PART OF THE RUPTURE DISC ITSELF, OR OTHER ENVIRONMENTAL MATTER IN THE SYSTEM. IT IS THE USER'S SOLE RESPONSIBILITY TO ASSURE THAT THESE PARTICLES ARE DIRECTED TO A SAFE AREA TO PREVENT PERSONAL INJURY OR PROPERTY DAMAGE.

THERE IS NO GUARANTEE OF RUPTURE DISC LIFE. SUCH LIFE SPAN IS AFFECTED BY CORROSION, CREEP AND FATIGUE, AND PHYSICAL DAMAGE. THESE CONDITIONS WILL DERATE THE RUPTURE DISC TO A LOWER SET PRESSURE. THE CUSTOMER AND/OR USER SHOULD BE PREPARED TO HANDLE PREMATURE FAILURE OF THE RUPTURE DISC. THE MEDIA OR OTHER ENVIRONMENTAL CONDITIONS SHOULD NOT ALLOW ANY BUILDUP OR SOLIDIFICATION OF MEDIA TO OCCUR ON A RUPTURE DISC. THIS MAY INCREASE THE PRESSURE SETTING OF THE RUPTURE DISC.

CUSTOMER AND/OR ITS INSTALLER SHALL BE SOLELY RESPONSIBLE FOR THE PROPER INSTALLATION OF SELLER'S HOLDERS AND RUPTURE DISCS INTO A SYSTEM. CUSTOMER AND/OR ITS INSTALLER SHALL BE SOLELY RESPONSIBLE FOR IMPROPER INSTALLATION AND PHYSICAL DAMAGE RESULTING THEREFROM, INCLUDING BUT NOT LIMITED TO, DAMAGE RESULTING FROM LEAKAGE, IMPROPER TORQUING OR SEATING OF A RUPTURE DISC OR FAILURE TO FOLLOW INSTALLATION INSTRUCTIONS WHERE PROVIDED.

RUPTURE DISCS ARE PRECISION SAFETY DEVICES AND MUST BE INSTALLED PROPERLY. RUPTURE DISCS MUST BE INSTALLED BY TRAINED, KNOWLEDGEABLE INSTALLERS AND ONLY WITHIN ENVIRONMENTS SUITABLE AND APPROPRIATE FOR A RUPTURE DISC. CARE MUST BE USED IN A FACILITY'S DESIGN TO PROTECT BOTH THE RUPTURE DISC FROM INADVERTENT DAMAGE WHICH COULD CAUSE ITS PREMATURE RELEASE AND TO PROTECT INDIVIDUALS EXPOSED TO HAZARDS CREATED BY SUCH SUDDEN RELEASE.

PROPER INSTALLATION OF A RUPTURE DISC IS CRITICAL TO PERFORMANCE AND TO SAFETY. FAILURE TO PROVIDE PROPER SEATING OF A RUPTURE DISC MAY AFFECT RUPTURE DISC PERFORMANCE, BURST PRESSURE ACCURACY AND MAY RESULT IN ITS PREMATURE FAILURE.

I. Safety Precautions Before Installation

THE UNIVERSAL B.D.I. ASSEMBLY IS AN ELECTRICAL SENSOR. EVERY EFFORT SHOULD BE MADE NOT TO FOLD, WRINKLE, TWIST, OR DO ANYTHING TO THE CIRCUIT STRIP THAT MIGHT CREATE A PREMATURE OPEN CIRCUIT.

II. Preparation of Rupture Disc Holder Outlet and Outlet Companion Flange for Installation

Clean all foreign material from the contact surface faces of both the rupture disc holder outlet and the outlet companion flange. These surfaces must be completely clean and free of all rust, corrosion, and foreign material to ensure a proper seal. Use of solvents, steel wool, or fine emery cloth is permissible. Do not re-machine. Do not use scraper or abrasives.

III. Installation of the Universal B.D.I. Assembly into the System (See Figure A)

Figure 'A'

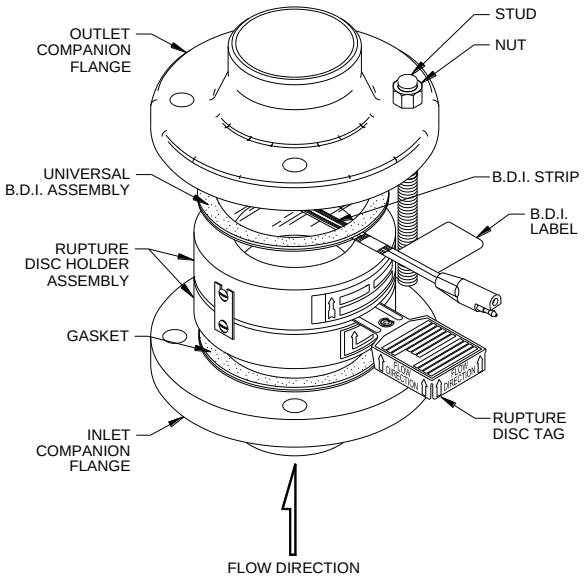

1. Minimum burst pressure based on full area relief devices of the same nominal pipe size.

Universal B.D.I.	
Size Inches / (mm)	Burst Pressure psig / (barg)
1 / (25)	15 / (1.03)
1-1/2 / (40)	10 / (0.69)
2 / (50)	4 / (0.28)
3 / (80)	2.5 / (0.17)
4 / (100)	2.5 / (0.17)
6 & up / (150 & up)	1 / (0.07)

Low Pressure Universal B.D.I.	
Size Inches / (mm)	Burst Pressure psig / (barg)
1 / (25)	1 / (0.07)
1-1/2 / (40)	1 / (0.07)
2 / (50)	1 / (0.07)

Universal B.D.I.

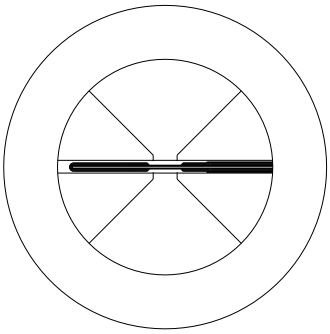

Low Pressure Universal B.D.I.

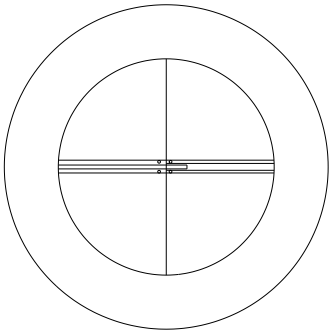

NOTE: DO NOT INSTALL THE UNIVERSAL B.D.I. ON DEVICES WITH MINIMUM BURST PRESSURE RATINGS BELOW THOSE LISTED ABOVE. THE MINIMUM BURST PRESSURE RATING OF A DEVICE THAT THE B.D.I. CAN BE INSTALLED WITH IS PRINTED ON THE LABEL ATTACHED TO THE LEAD WIRE OF THE B.D.I.

2. Assemble rupture disc and rupture disc holder as a unit per the applicable rupture disc installation instruction.

NOTE: The B.D.I. Assembly is typically supplied with a connector; however, an optional design without a connector may be supplied upon request.

3. Visually inspect the adhesion of the strip to the membrane and the electrical circuit of the UNIVERSAL B.D.I. Assembly. If the strip has become detached or the circuit has been broken, folded, wrinkled, or twisted, **DO NOT INSTALL THE UNIVERSAL B.D.I. ASSEMBLY.**

4. Place the UNIVERSAL B.D.I. Assembly with the side stamped “DOWNSTREAM SIDE” facing up (downstream) on top of the rupture disc holder outlet. Use care in keeping the B.D.I. Assembly and the holder outlet concentrically aligned.

NOTE: DEPENDING ON SPECIFIC RUPTURE DISC HOLDER DESIGN / DIMENSIONS, THE DOME OF THE RUPTURE DISC MAY PROTRUDE BEYOND THE HOLDER OUTLET, CONTACTING THE B.D.I. THERE MUST BE SUFFICIENT SLACK IN THE B.D.I. ASSEMBLY WHEN PLACED ON THE RUPTURE DISC AND HOLDER OUTLET SO THE MEMBRANE IS NOT TIGHT AGAINST THE RUPTURE DISC DOME. IF THIS OCCURS, IT COULD AFFECT THE PERFORMANCE OF THE RUPTURE DISC OR CAUSE PREMATURE FAILURE OF THE B.D.I. REFERENCE TABLE 1 FOR THE MAXIMUM HEIGHT THE RUPTURE DISC CAN PROTRUDE PAST THE HOLDER OUTLET. IF THE RUPTURE DISC PROTRUDES BEYOND THE ALLOWABLE HEIGHT OUTLINED IN THE TABLE, CONTACT CONTINENTAL DISC CORPORATION FOR ASSISTANCE.

Table 1: Maximum Height Rupture Disc Can Protrude Past the Holder Outlet

Size Inches / (mm)	Height Inches / (mm)	Size Inches / (mm)	Height Inches / (mm)
1 / (25)	0 / (0)	14 / (350)	2.09 / (53)
1-1/2 / (40)	0 / (0)	16 / (400)	2.41 / (61)
2 / (50)	0 / (0)	18 / (450)	2.75 / (70)
3 / (80)	0 / (0)	20 / (500)	2.84 / (72)
4 / (100)	0.62 / (16)	24 / (600)	3.51 / (89)
6 / (150)	0.93 / (23)	28 / (700)	4.20/ (107)
8 / (200)	1.29 / (33)	30 / (750)	4.57 / (116)
10 / (250)	1.45 / (37)	32 / (800)	4.91 / (125)
12 / (300)	1.74 / (44)	36 / (900)	5.59 / (142)

5. Place the entire unit into piping.

6. Lower the outlet companion flange carefully onto the UNIVERSAL B.D.I. Assembly.

7. The Universal B.D.I. Assembly is provided with double headed ties (2 additional ties are provided for convenience). Create double loop as shown in **Figure B-1**. Slip the tie over one companion flange stud as shown (see **Figure B-2**), locating it near where the B.D.I. strip exits. Snug the tie around the stud and the B.D.I. wire as shown in **Figure B-2**.

8. Install the remaining studs and nuts in accordance with the rupture disc installation instruction. Do not exceed the maximum torque values listed in Table 2 for the specific size and class of flange.

NOTE: EXCEEDING THE MAXIMUM TORQUE VALUES IN TABLE 2 COULD DAMAGE THE B.D.I.

9. If the B.D.I. Assembly is installed directly between flanges: Install lightly oiled free running studs and nuts to finger tightness. Using a cross torquing pattern (see **Figure C**), torque each nut with a calibrated torque wrench at 20% increments of recommended torque value (see **Table 2**). Repeat 20% increments and cross- torquing pattern until final torque value is achieved. Recheck all nuts in rotational sequence at final torque value. These values are based on using gasket materials having a gasket factor of 2.75, gasket-seating stress of 3,700 psi, and stud and nut material per ASME SA193-B7 and SA194-2H respectively, with a stress of up to 30,000 psi. The use of studs and nuts with lower strength may prove unsatisfactory.

   NOTE: Exceeding the values of torque outlined in Table 2 may damage the B.D.I.

10. Plug the B.D.I. connector into the lead wire connector using a slight twisting action.

    NOTE: A lead wire is a component of the B.D.I. monitoring device.

FIGURE 'B-1'

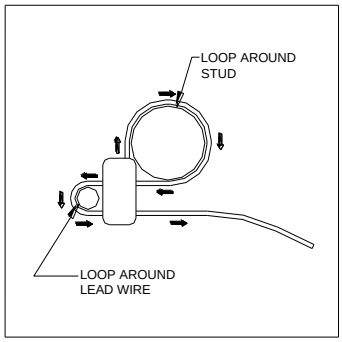

FIGURE 'B-2'

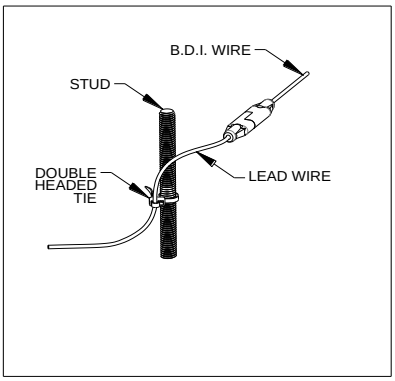

IV. Preventative Maintenance

1. Risk assessment and an annual rupture disc and UNIVERSAL B.D.I. Assembly replacement are recommended. Rupture disc service life is determined by system operating conditions. The effects of severe pressure/vacuum cycles, corrosion, temperature variations, or other adverse conditions must be evaluated by the user through actual service experience to determine optimal service life.

2. **IF THE RUPTURE DISC AND UNIVERSAL B.D.I. ASSEMBLY ARE NOT REPLACED PERIODICALLY WHEN EXPOSED TO THESE CONDITIONS, PREMATURE FAILURE OF THE RUPTURE DISC OR UNIVERSAL B.D.I. ASSEMBLY MAY OCCUR, THEREBY DISCHARGING THE PROCESS MEDIA.**

Figure 'C'

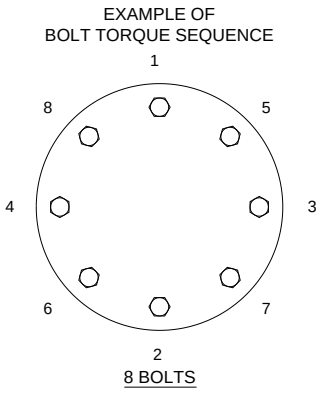

3. To avoid extended downtime, maintain three spare rupture discs and UNIVERSAL B.D.I. Assemblies in stock at all times for each holder in use. The number of spares required ultimately will be determined by service conditions.

V. Customer Service

If you wish to discuss your application, installation, or maintenance, please contact the Customer Service Department at our headquarters location.

B.D.I. ALARM SYSTEM OPERATING LIMITS

TEMPERATURE: -40° F to + 400° F
(-40° C to + 204° C)

MAX CURRENT: 50 Milli Amps
MAX VOLTAGE: 24 VDC

FULFILLS THE REQUIREMENTS OF DIRECTIVE 2014/34/EU (ATEX) FOR: Equipment or protective system intended for use in potentially explosive atmospheres.

Conformity assessment performed by Notified Body no. 0359,
Intertek Testing and Certification Limited, Leatherhead, Surrey, UK.

BURST DISC INDICATOR (B.D.I.®): Sizes 25mm through 900mm (1 inch through 36 inches)

Marked: II 1 G Ex ia IIC Tx Ga
II 1 D Ex ia IIIC Tx Da
I M1 Ex ia I Ma
(Tamb = -40°C ≤ Ta ≤ +204°C)

EC Type Examination Certificate: ITS13ATEX27734X

THE MAXIMUM INTRINSICALLY SAFE INPUT PARAMETERS ARE AS FOLLOWS:

Ui = 24V dc
Ii = 50 mA
Pi = 0.3W

THE EQUIVALENT PARAMETERS ARE:

Ci = 0
Li = 0

SPECIAL CONDITIONS FOR SAFE USE:

1. Temperature Class of the BDI sensor is marked as Tx, since the surface temperature is controlled by the process temperature being monitored. The sensor itself exhibits negligible temperature rise.
2. When located in an area requiring EPL Ga / Category 1G (e.g. Zone 0) hazardous area, the user shall ensure that electrostatic charging of the non-metallic parts cannot occur.
3. When provided with terminations by means of flying leads, these shall be terminated in an appropriately protected terminal box.
4. When installed, the BDI strip shall be provided with an IP rating of IP20 as a minimum.
5. For Group I applications, the BDI strip and terminations shall be protected to IP54 or better.

TABLE 2

Maximum Recommended Torque Values for B.D.I.

Sizes 1" Through 36"

SIZE		COMPANION FLANGE RATING			RECOMMENDED TORQUE VALUE		SIZE		COMPANION FLANGE RATING			RECOMMENDED TORQUE VALUE	
IN	MM	ASME	DIN	JIS	FT•LB	N•m	IN	MM	ASME	DIN	JIS	FT•LB	N•m
1	25	150	---	---	35	47	8	200	150	---	---	130	176
1	25	---	10/16	---	33	45	8	200	---	10	---	136	184
1	25	---	---	10/20	44	60	8	200	---	16	10	91	123
1	25	300/600	---	---	65	88	8	200	---	---	16/20	100	136
1	25	---	25/40	---	49	66	8	200	300	---	---	180	244
1	25	---	---	30/40	66	89	8	200	---	25	30	194	263
							8	200	---	40	---	219	297
1-1/2	40	150	---	---	35	47							
1-1/2	40	---	10/16	10/20	44	60	10	250	150	---	---	185	251
1-1/2	40	300/600	---	---	120	163	10	250	---	10	---	166	225
1-1/2	40	---	25/40	---	101	137	10	250	---	---	10	183	248
1-1/2	40	---	---	30/40	126	171	10	250	---	16	16/20	200	271
							10	250	300	---	---	275	373
2	50	150	---	---	65	88	10	250	---	25	---	390	529
2	50	---	10/16	10	66	89	10	250	---	40	30	433	587
2	50	---	---	16/20	33	45							
2	50	300/600	---	---	65	88	12	300	150	---	---	185	251
2	50	---	25/40	---	131	178	12	300	---	10	---	166	225
2	50	---	---	30/40	66	89	12	300	---	---	10	137	186
							12	300	---	16	---	200	271
3	80	150	---	---	65	88	12	300	---	---	16/20	150	203
3	80	---	10/16	10	33	45	12	300	300	---	---	375	508
3	80	---	---	16/20	41	56	12	300	---	25	---	354	480
3	80	300/600	---	---	120	163	12	300	---	---	30	394	534
3	80	---	25/40	---	101	137							
3	80	---	---	30/40	126	171							
4	100	150	---	---	65	88							
4	100	---	10/16	10	66	89							
4	100	---	---	16/20	82	111							
4	100	300	---	---	120	163							
4	100	---	25/40	---	126	171							
4	100	---	---	30	139	188							
6	150	150	---	---	120	163							
6	150	---	10/16	10	126	171							
6	150	---	---	16/20	92	125							
6	150	300	---	---	120	163							
6	150	---	25/40	---	227	308							
6	150	---	---	30	151	205							

TABLE 2							
Maximum Recommended Torque Values for B.D.I.							
Sizes 1" Through 36"							
SIZE		COMPANION FLANGE RATING				RECOMMENDED TORQUE VALUE	
IN	MM	ASME	ASME B 16.47 Series A	DIN	JIS	FT•LB	N•m
14	350	150	---	---	---	275	373
		---	---	10	---	162	220
		---	---	---	10	179	243
		---	---	16	---	195	264
		---	---	---	16/20	244	331
16	400	150	---	---	---	275	375
		---	---	10	10	260	352
		---	---	16	---	292	396
		---	---	---	16/20	325	441
		---	---	---	30	461	625
18	450	150	---	---	---	375	508
		---	---	---	10	315	427
		---	---	---	16/20	394	534
20	500	150	---	---	---	375	508
		---	---	10	10	394	534
		---	---	16	16/20	492	667
24	600	150	---	---	---	485	658
		---	---	10	---	516	700
		---	---	---	10	573	776
		---	---	16	---	630	854
		---	---	---	16/20	687	931
28	700	---	150	---	---	485	658
		---	---	10	---	481	652
		---	---	---	10	535	725
		---	---	16	---	588	797
		---	---	---	16	695	942
		---	---	---	20	802	1087
30	750	---	150	---	---	485	658
		---	---	---	10	535	725
		---	---	---	16	695	942
		---	---	---	20	927	1257
36	900	---	150	---	---	875	1186
		---	---	10	10	787	1067
		---	---	16	---	945	1281
		---	---	---	16	1181	1601
		---	---	---	20	1365	1851

Continental Disc®
Corporation

Performance Under Pressure®

HEADQUARTERS //
3160 W. Heartland Drive
Liberty, MO 64068 USA
Ph (816) 792-1500
Fax (816) 792-2277
sales@contdisc.com
contdisc.com